NOTE:ALL MATERIAL COMPLIANT ROHS STANDARD

REVISION INFORMATION			
Rev.	Rev. Date	Modified By	Brief Description

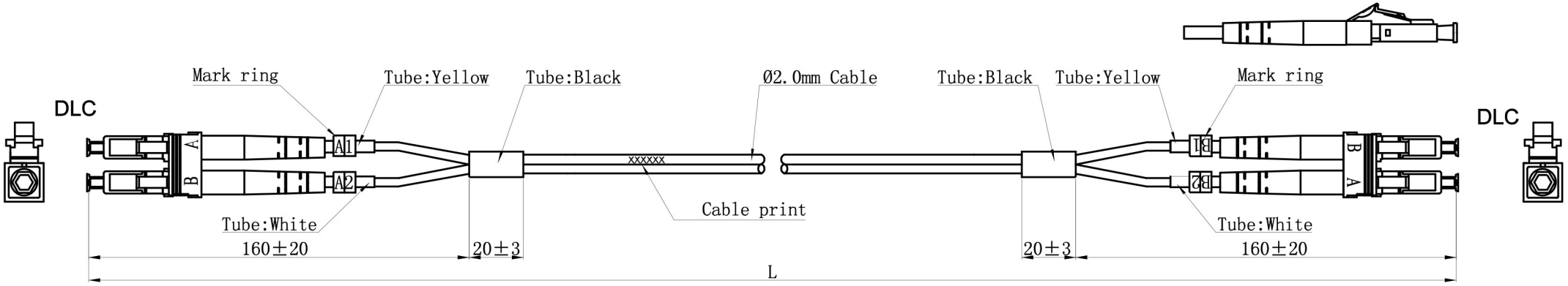

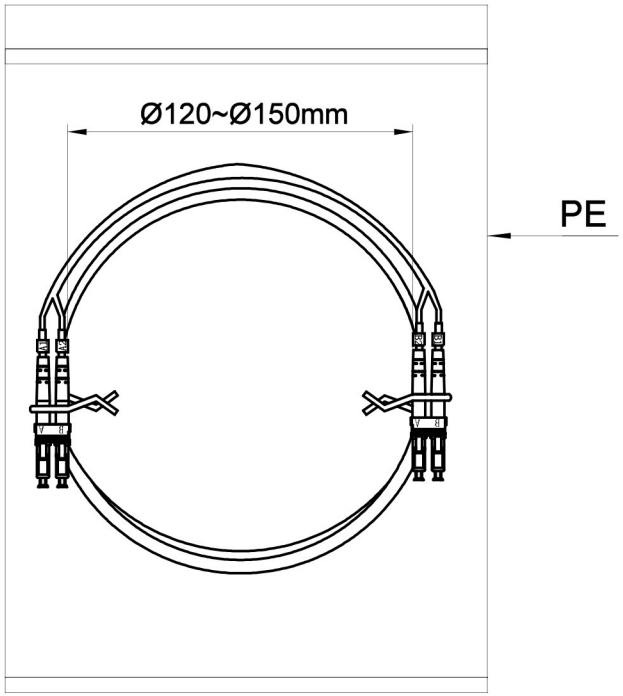

Specifications:

Type	DLC/UPC-DLC/UPC
Fiber Mode	OM4
Core Diameter(um)	50/125
Operating Wavelength(nm)	850/1300
Cable Color	Violet
Cable Diameter(mm)	Ø2.0
Operating Temperature(°C)	-25~+70
Storage Temperature(°C)	-25~+70
Insertion loss(dB)	≤0.3
Return loss(dB)	≥35

L≤10m，TOLERANCES:0≤ΔL≤10cm
L＞10m，TOLERANCES:0≤ΔL≤1%*L

Remarks:

Length	ITEM NO.	Length	ITEM NO.
L=1M	102957	L=20M	102970
L=1.5M	102958	L=25M	102971
L=2M	102959	L=30M	102972
L=3M	102960	L=35M	102973
L=4M	102961	L=40M	102974
L=5M	102962	L=50M	102975
L=6M	102963		
L=7M	102964		
L=8M	102965		
L=9M	102966		
L=10M	102967		
L=12M	102968		
L=15M	102969		

NO.	PART NAME	SPECIFICATION DESCRIPTION	QT'Y	UNIT
③				
②				
①				

Unless specified on the drawing, tolerances are per the follows:

.	+1
.x	+0.2
.xx	+0.05

DRAWN BY	DATE: 2018/03/12	DESCRIPTION: LC-LC-DX OM4 Patchcord	
CHECKED BY	SHEET 1of 2	ITEM NO.	
APPROVED BY	SCALE 1:1	REV. 00	UNIT:mm